RevNo	Revision note	Date	Signature	Checked
0	GENERAL REVISION		IP	IP

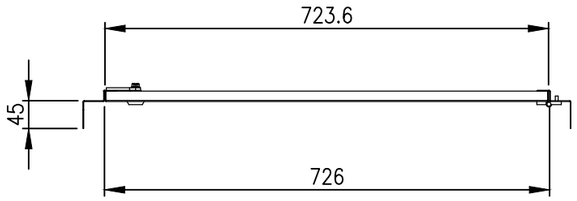

TOP VIEW

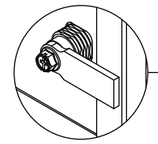

LOCKSET
SPOT DETAIL

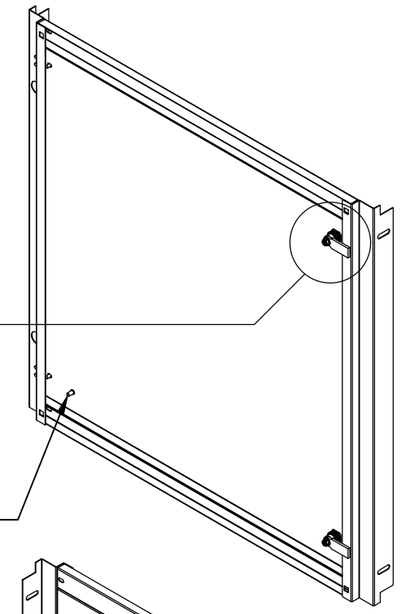

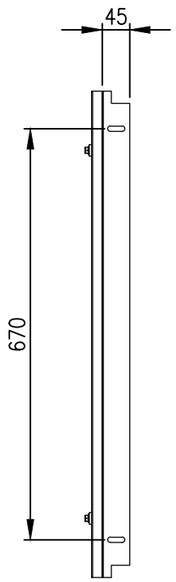

LEFT SIDE
VERTICAL FRAME

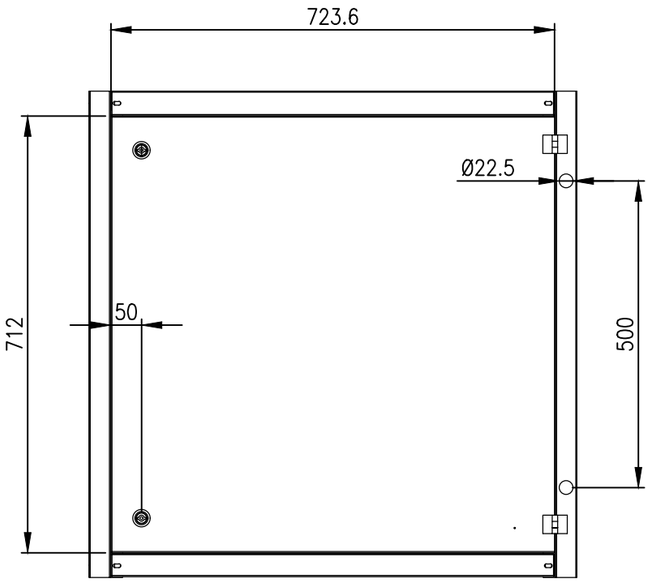

FRONT VIEW

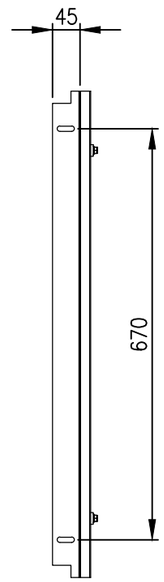

RIGHT SIDE
VERTICAL FRAME

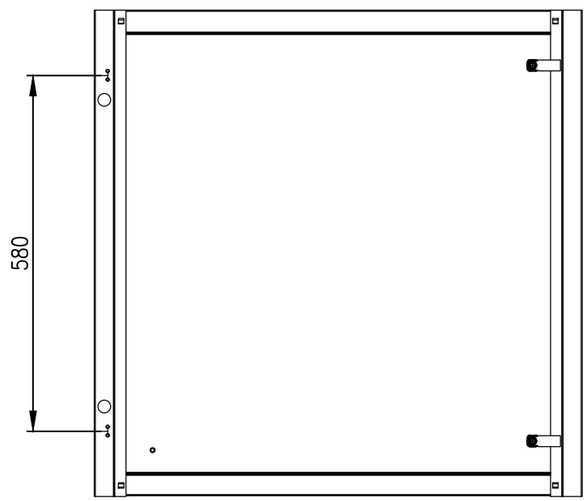

REAR VIEW

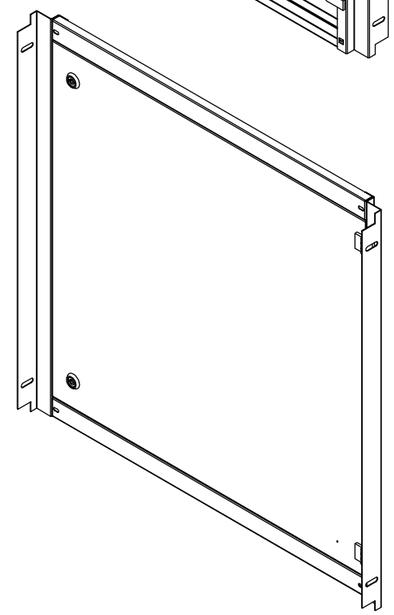

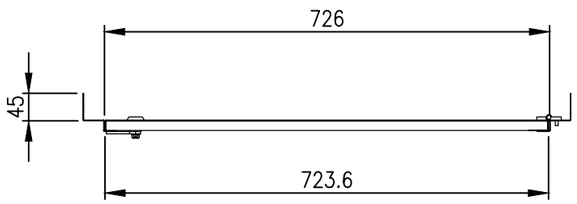

BOTTOM VIEW

MATERIAL
FRAME: 1.5mm 316 STAINLESS STEEL
DOOR PANEL: 1.5mm 316 STAINLESS STEEL

CLEARANCE/DISTANCE DIMENSIONS:
-INNER DOOR TO OUTER DOOR: 68mm
-INNER DOOR TO MOUNTING PLATE:
-(ENCLOSURE WITH 300 DEPTH): 217.2mm

© IP ENCLOSURES 2022.
THIS DRAWING SHALL NOT BE COPIED OR REPRODUCED
WITHOUT AUTHORISATION FROM IP ENCLOSURES.
www.ipenclosures.com.au

Itemref	Quantity	Title/Name, designation, material, dimension etc			Article No./Reference	
Designed by IP		Checked by IP	Approved by - date 11/07/22	Filename IP-SSID8080	Date 11/07/22	Scale 1:10
Enclosures		800Hx800W 316SS INNER DOOR				
		IP-SSID8080			Edition 0	Sheet 1/1