RevNo	Revision note	Date	Signature	Checked
0	GENERAL REVISION		IP	IP

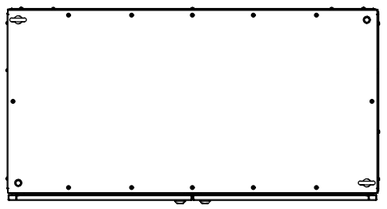

TOP VIEW

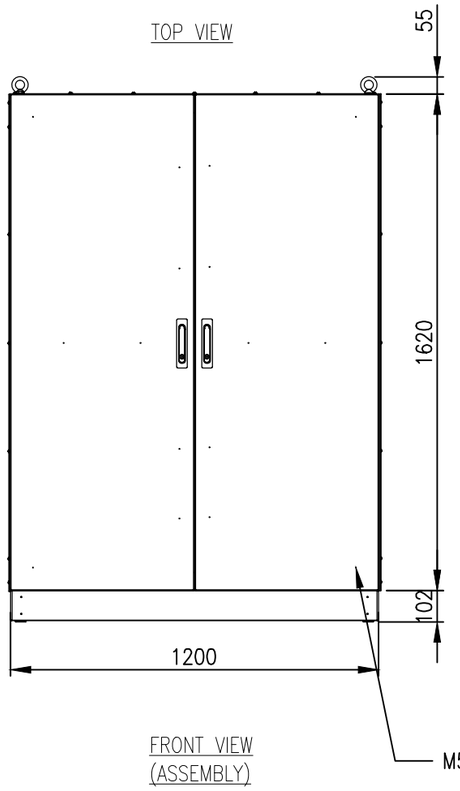

FRONT VIEW
(ASSEMBLY)

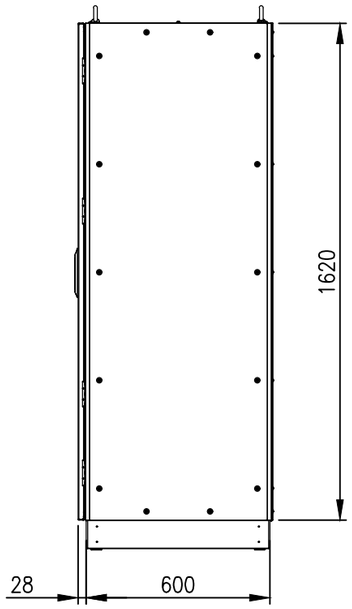

SIDE VIEW

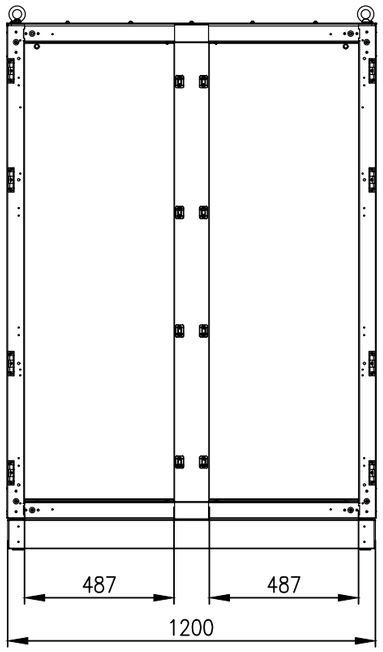

FRONT VIEW
(PANELS REMOVED)

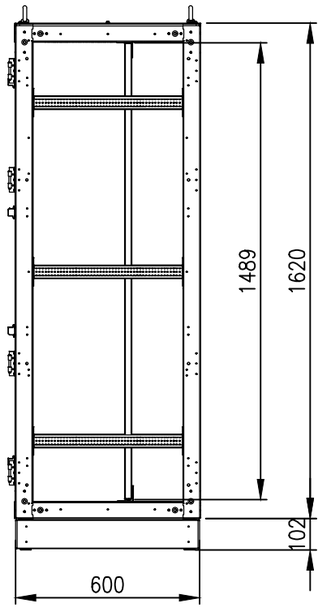

SIDE VIEW
(PANELS REMOVED)

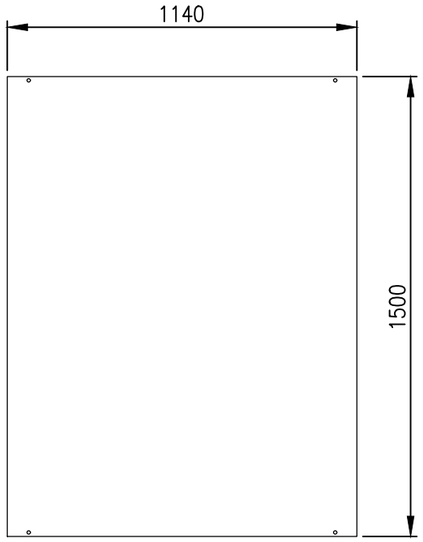

DEVICE MOUNTING PLATE

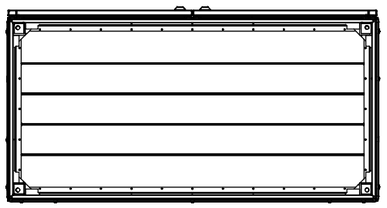

BOTTOM VIEW

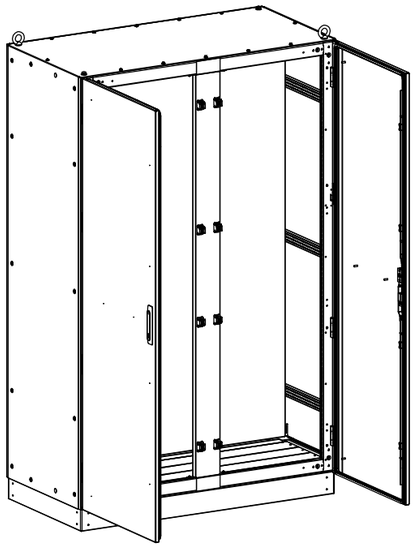

MATERIAL
MAIN FRAME: 2.0mm GALVANISED STEEL PROFILE
PANELS: 1.2mm POWDERCOATED GALVANISED SHEET
DOOR: 2.0mm POWDERCOATED GALVANISED STEEL
MOUNTING PLATE: 2.0mm GALVANISED STEEL SHEET
SEAL: EPDM
SURFACE TREATMENT: POWDER–COAT 80–120micron
STANDARD COLOUR: RAL7035

PROTECTION: IP55 IK10
STANDARD: IEC62208, IEC/EN/AS60529
ORDERING INFORMATION:
- ENCLOSURE: IP–MFS16212060
- SIDE PANEL: IP–MFSP16260
- MOUNTING PLATE: IP–MFSM162120
- BASE: IP–MFSB12060

© IP ENCLOSURES 2024.
THIS DRAWING SHALL NOT BE COPIED OR REPRODUCED
WITHOUT AUTHORISATION FROM IP ENCLOSURES.
www.ipenclosures.com.au

Itemref	Quantity	Title/Name, designation, material, dimension etc			Article No./Reference	
Designed by IP		Checked by IP	Approved by - date 19/06/24	Filename IP–MFS16212060	Date 19/06/24	Scale 1:20
Enclosures		1620x1200x600 STEEL FREESTANDING				
		IP–MFS16212060			Edition 0	Sheet 1/1